TAROT

ZYX-OSD

User Manual V1.00

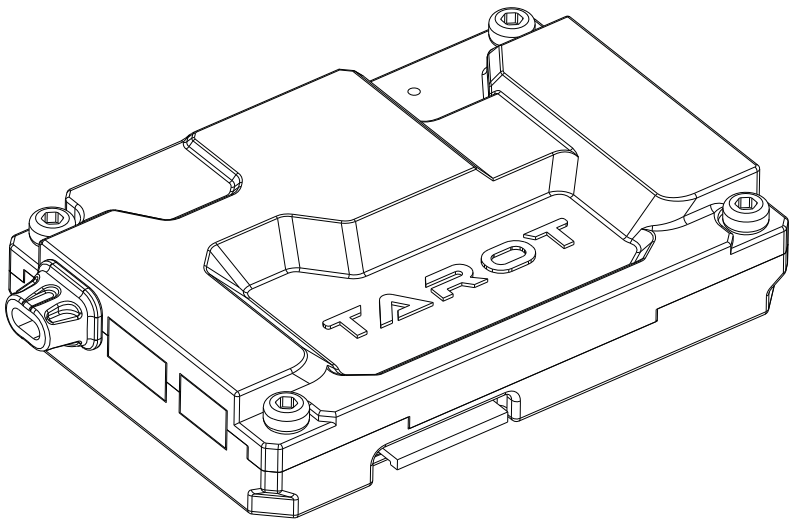

www.tarotrc.com

2015-06-16 Revision

Contents

Product Introduction.....2
Specifications.....2
Wirings.....2
Port Descriptions.....3
Input Video Source Switch Descriptions 3
Screen Type Switch Descriptions 3
Display Descriptions.....4
Assistant Software.....6
How To Use The Assistant Software 6
LED Indicator.....7
Troubleshooting.....7

TAROT

Product Introduction

With ZYX-OSD, basic fight information, such as altitude and speed, can be superposed on the receiver You can obtain actual fight status in real time to ensure a safe and delightful journey.

Moreover, the data-recording function ensures all the fight data would be saved in MINI-SD card, which facilitates you to analyze information and serves as a black box in the critical moment. Also, please make sure MINI-SD has been formatted into FAT32.

Two video outputs are available to be switched by R/C, and PAL or NTSC (video format) can be recognized automatically.

Please note that: ZYX-OSD has to work with ZYX-M fight control system.

Specifcations

Input voltage/current	12 V (80mA) with no external power
Output voltage/current	12V (1.5A) & 5V (2.0A)
Dimensions	53mm*36 mm*10 mm
Weight	18g
Video Format	PAL/NTSC (AUTO-identifcation)
Operating Temperature	−20℃~60℃

Wirings

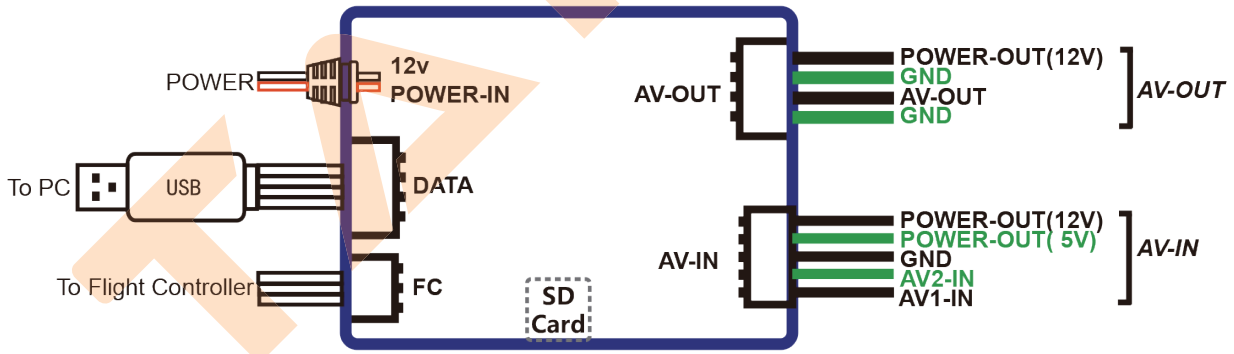

1.Products to be prepared: ZYX-OSD Module, ZYX-M Multi-Rotor Flight Controller, PMU Power Management Module, MINI-SD Card, Camera/Other Video Input Device, Wireless Video Transmission Module(Transmit and Receive) and Monitor.

2. The supply voltage of ZYX-OSD is 12V, and you should choose the PMU module of ZYX-M to power it. Please ensure the correct wirings between ZYX-OSD and other devices.

3. Wire other cables according to the diagram. Please ensure the correct connections of input port of fight controller, AV-IN port and AV-OUT port.

Port Descriptions

POWER-IN	Input Port of Power Supply: with 12V power supply of PMU Module
DATA	Firmware Update& Assistant Software Port: connect the USB Module and PC. Also, set parameters and update the frmware.
FC	Connection Port of Flight Controller: connect the fight controller and ZYX-OSD Module through a 3P cable. All the fight data and control data will go into ZYX-OSD module through this port. ZYX-M fight controller will control the switch of display data and AV-IN channel.
AV-OUT	Video Output and Power Supply Port: this port provides 12V voltage output, and 1.5A current output at maximum. Also, it is available to power up the image transmission.
AV-IN	Video Input and Power Supply Port: this port provides 12V and 5V voltage output, 2A current output at maximum. Also, it is available to power up the camera and other video input devices.
SD	Mini-SD Card Port: for data storage.

Input Video Source Switch Descriptions

You can control the ZYX-M flight control module to switch between different input video sources. Ifyou have installed two cameras, and wish to switch from different video sources during flight, please choosea two-positioned switch of R/C and observe the corresponding channel in the CamSwitch of OSD channel inCH Mapping of BASIC page in the ZYX-M Assistant Software. Moreover, toggle the switch to observe themovement of cursor.

Screen Type Switch Descriptions

You can control the ZYX-M flight control module to switch between different screen types. If you needto switch different switch types during flight, please choose a two-positioned switch R/C and observe thecorresponding channel in the InfoSwitch of OSD channel in CH Mapping ofBASIC page in the ZYX-MAssistant Software. Moreover, toggle the switch to observe the movement of cursor.

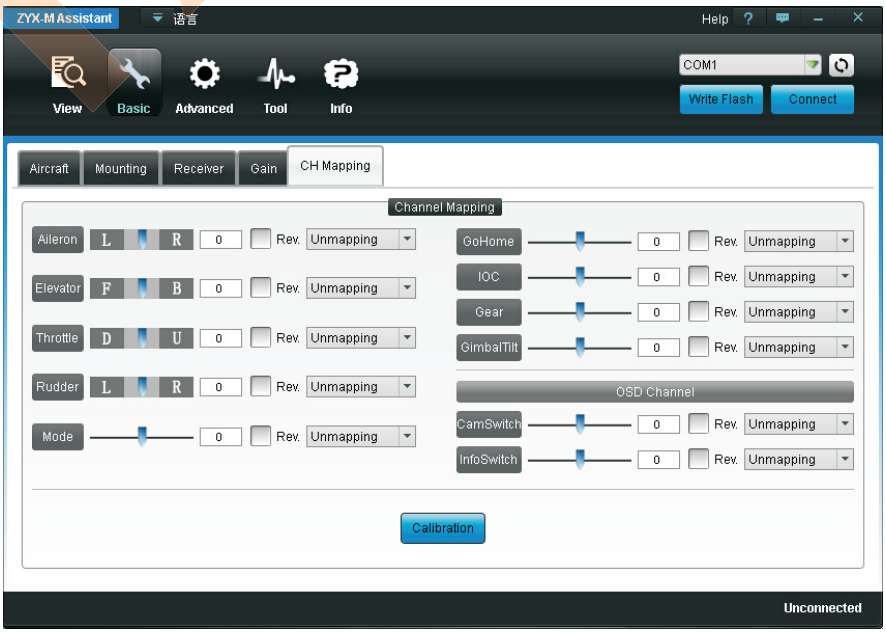

Display Descriptions

1. Aircraft Attitude

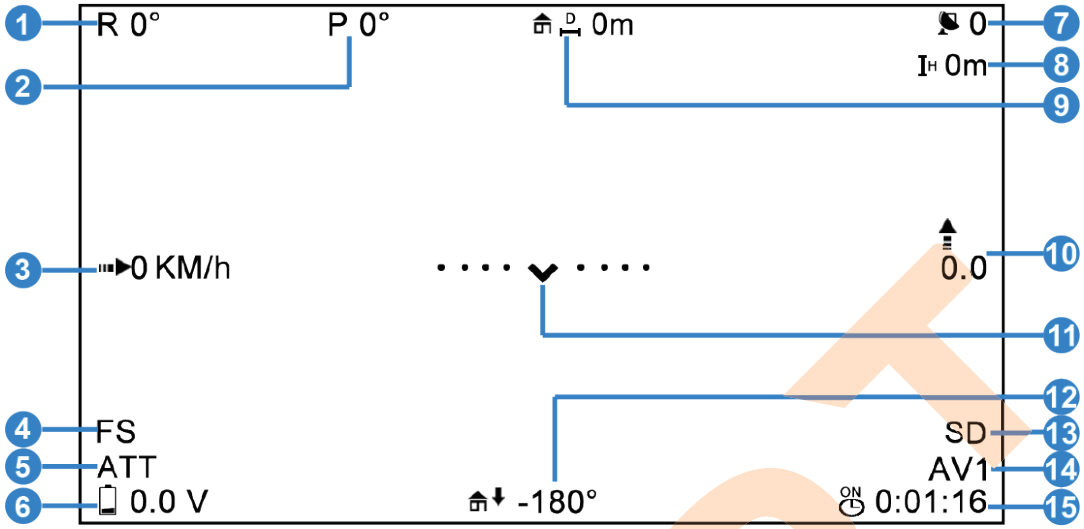

2. Aircraft Position

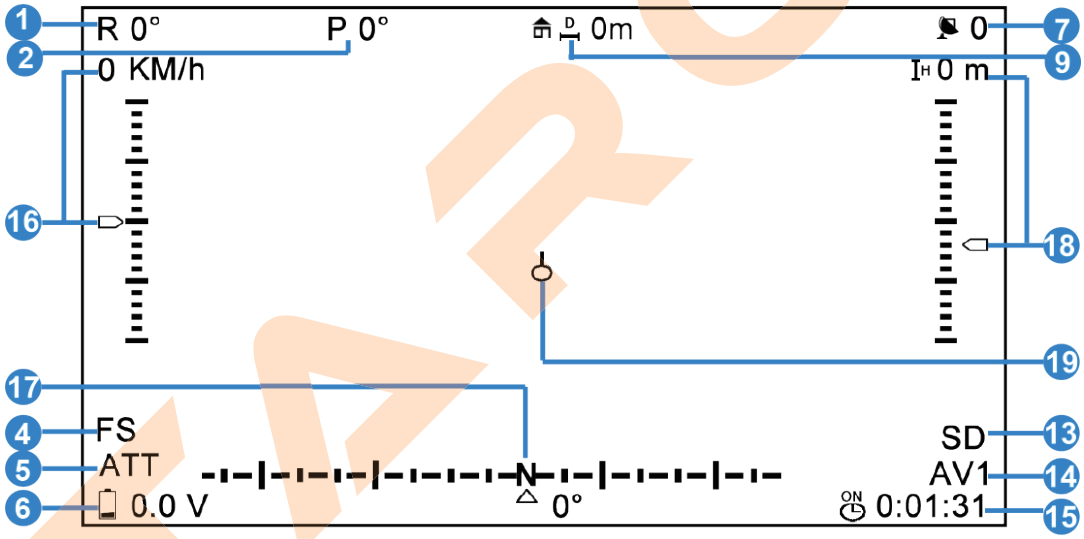

NO.	FUNCTION	DISPLAY	DISCRIPTIONS
1	ROLL Attitude	R 0°	When the value is positive, the aircraft moves to right; When the value is negative, the aircraft moves to left.
2	PITCH Attitude	P 0°	When the value is positive, the aircraft nose is up; When the value is negative, the aircraft nose is down.
3	Horizontal Speed	0KM/h	The aircraft horizontal speed.
4	FailSafe	FS	As Failsafe is triggered, "FS" icon blinks. Otherwise, this icon will be constantly on.
5	Flight Mode	MAN ATT GPSH GPSC	MAN: Manual Mode ATT: Attitude Mode GPSH: GPS Mode GPSC: Intelligent Heading Mode

6	Battery Voltage	0.0V	Real time battery voltage. When the voltage is lower than the set value, Battery icon blinks.
7	Satellites	0	Current acquired GPS Satellites. When the number is lower than the set value, "Satellites" icon blinks.
8	Relative Altitude	H 0m	The height between the aircraft and take-off point.
9	Distance Between Home Point and Aircraft	D 0m	Distance between aircraft and home point. The icon will blink when distance is over the alarm.
10	Vertical Speed	0.0	Aircraft vertical speed.
11	Attitude Line		Use attitude line to observe aircraft attitude.
12	Azimuth An-gle between Home Point and Aircraft	-180°	When the home point is in front of the aircraft, the angle is 0° and the arrow points to the top of screen. When the home point is in the right side of the aircraft, the angle is 90° and the arrow points to the right of screen. When the home point is in the left side of the aircraft, the angle is -90° and the arrow points to the left of screen. When the home point is behind the aircraft, the angle is +180°/-180°, and the arrow points to the bottom of screen. The arrow points to the direction of home point. You can return to the point based on the guidance of arrow.
13	SD Card Status	SD	SD Card will blink if SD Card has not been installed or some errors happen.
14	AV-IN Channel	AV1、AV2	The relevant Video Input Channel.
15	Time Display	ON 0:01:31	The working time since it has been powered on.
16	Horizontal Speed & Scale-plate	0KM/h	Aircraft Horizontal Speed.
17	Direction Angle	N 0°	Included Angle between aircraft nose and due north direction.
18	Vertical Altitude & Scale-plate	H 0m	Aircraft Height.
19	Aircraft Direction & Home Point Display		The resolution ratio is relevant to the max distance alarm. Please set an appropriate alarm distance.

Assistant Software

How To Use The Assistant Software

1. After turning on the R/C, switch on the computer and power up the ZYX - and PC through USB module.

2. Run ZYX-OSD Assistant Software and choose a correct port. Click “Connect” button. If “Connected” has been showed in the left bottom, the connection is correct.

3. Choose an appropriate screen type based on your preference and adjust display position of IOS information. Also, set the alarm of satellites, voltage, distance, min altitude and max altitude.

4. The edit box will turn yellow when all the parameters have been modifed. Please press “Enter” key to save parameters.

5. Please click “Write Flash” to save parameters. Otherwise, parameters will lose.

6. In Info page, you can fnd the current frmware version, and update it from local or online.

LED Indicator

LED	Descriptions
RED & Blue Light Blink twice.	Initialization.
Blue Light Blinks.	Connection with fight controller and data recording function are correct.
RED Light Blinks twice.	MINI-SD Card has not been installed or abnormal working condition.

Troubleshooting

Phenomenon	Reasons	Solutions
Only OSD information, no video signal.	Video input error;	Check AV-IN port and video input device.
No image in the screen.	Video output or wireless transmission error;	Make sure the image transmission and screen are correct.
OSD data have not changed.	Flight controller port connection error;	Make sure the cable between fight controller and OSD is correct.
After powering up, RED & Blue Light turn off.	Power-supply problems;	Pay attention to the negative and positive of power supply and supply voltage.
RED Light blinks twice.	MINI-SD card has not been installed or abnormal working condition;	Insert Mini-SD card or format it into FAT32. Without Mini-SD card, data-recording function cannot be triggered, but OSD information still can be shown.
OSD Module cannot be connected to PC through USB cable.	1. Drive has not been installed correctly; 2. A wrong port has been chosen; 3. USB Module and ZYX-OSD Connection Port error;	1. Re-install the drive ; 2. Choose a correct port; 3. Check the connection cable;